TIEFENBACH
Control Systems GmbH

# We give impulses >>>

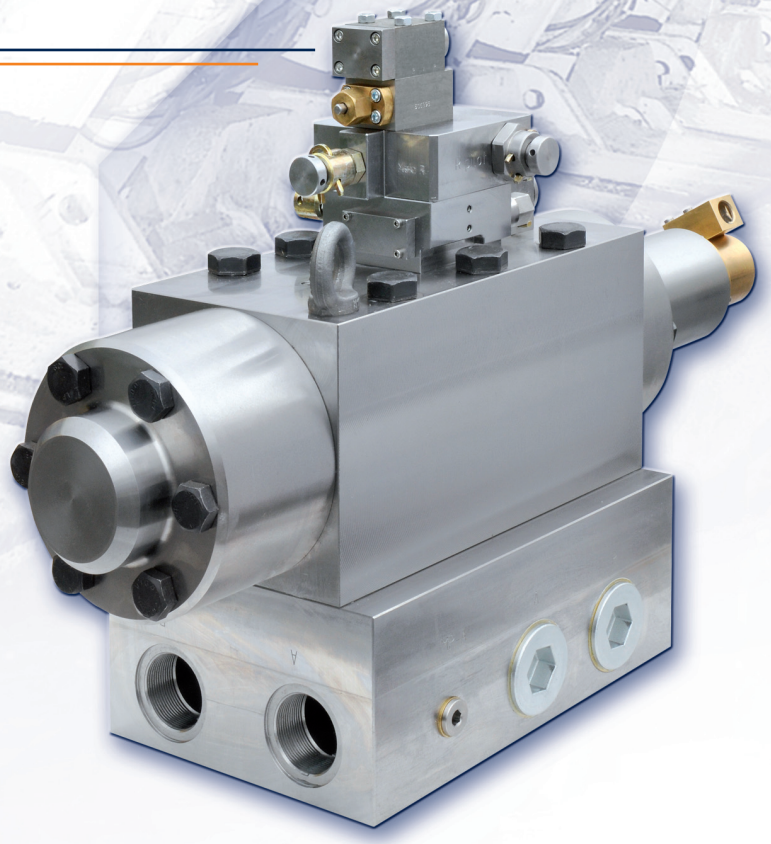

# DUMP VALVE

TO SAFELY MONITOR, RELIEVE AND SHUT OFF THE FACE SUPPLY NETWORK

# DUMP VALVE

## ... MONITORING · RELIEVING · SHUTTING OFF

### >>> IN EMERGENCY SITUATIONS IT MAY OFTEN BE NECESSARY TO RELIEVE THE MAIN SUPPLY LINE OF THE LONGWALL FACE SAFELY AND QUICKLY. THIS IS THE TASK OF THE DUMP VALVE.

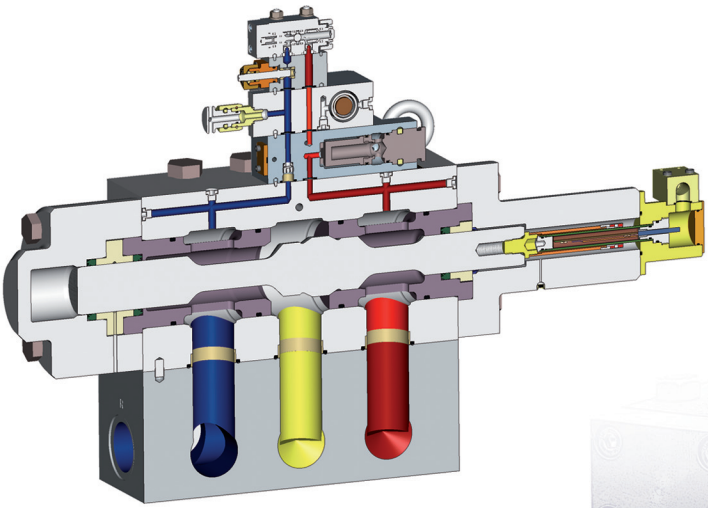

### ADVANTAGES

- Face line is relieved quickly
- Pressure water hammers are prevented by filling the face line slowly
- Remote operation from the surface
- Operation by quick stop device from underground
- Closes automatically in the event of a line rupture (ramp monitoring)
- Shuts off the face supply network if pumps fail
- Protects the hose and fitting material

The dump valve is installed between the pump station and the first consumer. Only one valve of this kind is required in the hydraulic circuit. When deactivated it switches to open the face line and allows the fluid present in the line to flow back into the tank.

The dump valve additionally prevents that fluid continues to be delivered or is delivered again from the pump station to the face line – which is another important safety aspect.

### >>> SCHEMATIC SYSTEM PRESENTATION

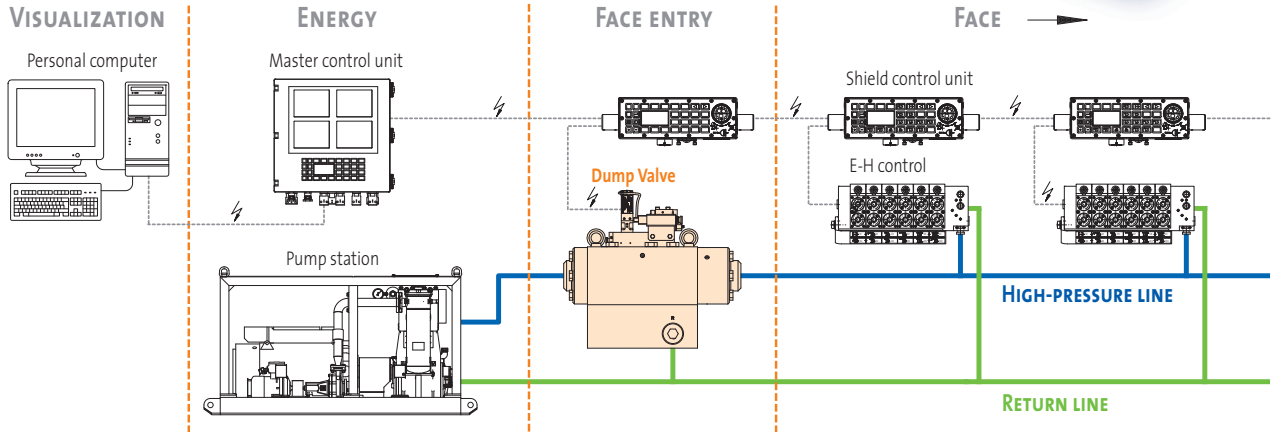

TIEFENBACH
Control Systems GmbH

## >>> DUMP VALVE SWITCHING DIAGRAMS

### OPERATING FUNCTION

The pilot valve is activated to open the dump valve permitting flow in the direction of the 3/2-way valve NG6 and pushing the latter into locked position.

This interrupts flow to the piston side KS1 of the 3/2-way main valve. The piston side KS2, however, remains pressurized and opens the main valve.

The passage from the pump side to the face blokked before is now free.

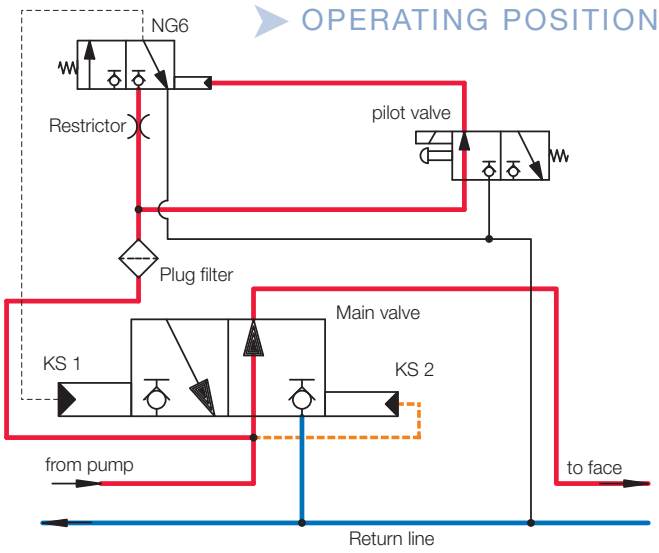


### SHUT-OFF FUNCTION

Upon operation of the face-wide quick stop the power supply for the valve solenoid of the pilot valve is interrupted and the valve returns to locked position due to the spring force. Flow to the 3/2-way valve NG6 is interrupted and the valve opens.

Thus, fluid can be supplied to the piston side KS1 of the 3/2-way main valve via the pump pressure. The main valve goes into locked position and the passage from the pump side to the face is closed. At the same time, the passage from the face side to the return opens which causes the face line to be drained.

By re-activating the pilot valve the dump valve is switched back to operating function.

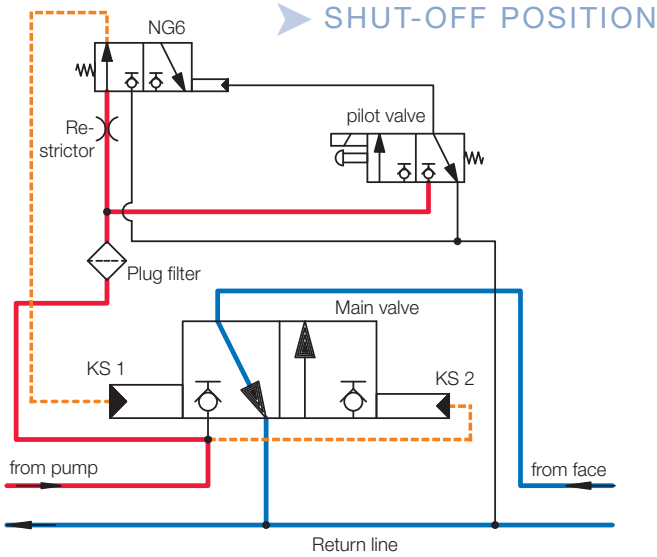


## >>> ADDITIONAL OPTIONS

### MEASURING THE PISTON POSITION (OPTIONAL)

The piston is equipped with a path monitoring facility permitting to measure its position.

This facility provides an electrical signal when the two end positions of the piston are reached.

Incorrect positions of the piston can thus be detected and further safety actions taken.

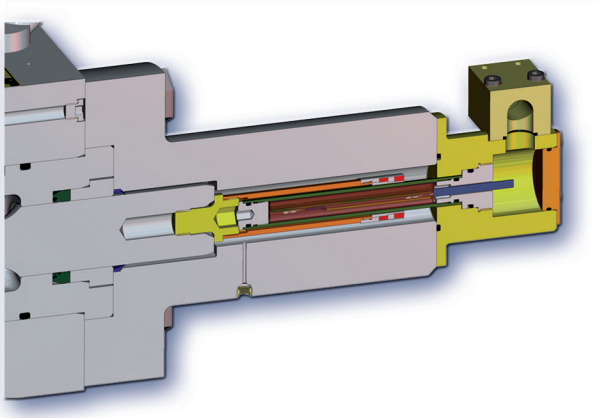

# DUMP VALVE

## ... MONITORING · RELIEVING · SHUTTING OFF

## TECHNICAL DATA

| | |
|---|---|
| ➤ Designation | Dump valve |
| ➤ Nominal width | DN 50 |
| ➤ Operating pressure | 450 bar |
| ➤ Medium | HFA |
| ➤ Ports hydraulic | G2 |
| ➤ Ports electronic | SKK 24 |
| ➤ Max. Dimensions (W x D x H) | approx. 620 x 540 x 260 mm |
| ➤ Weight | approx. 270 kg |

## FLOW-DIAGRAM

NG50

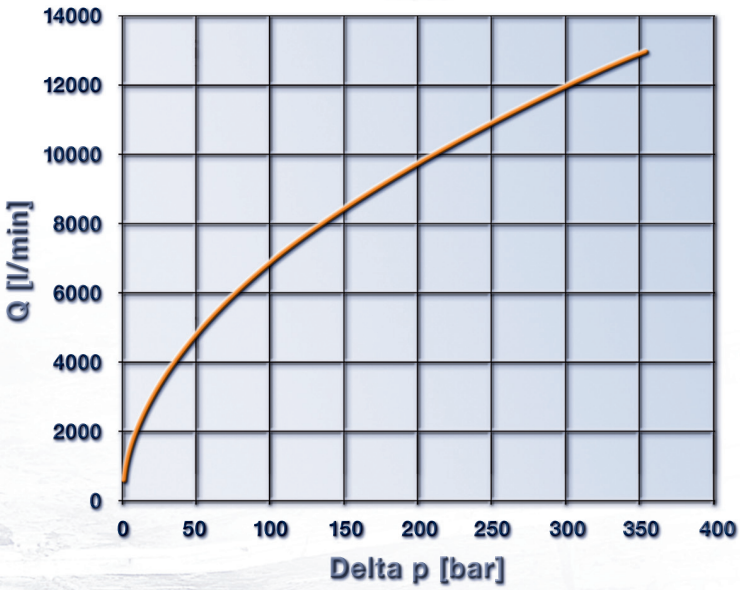


- The information given in this leaflet is for guidance only.
- Obligations and commitments or claims of any kind cannot be derived therefrom.

>>> Version 11/11

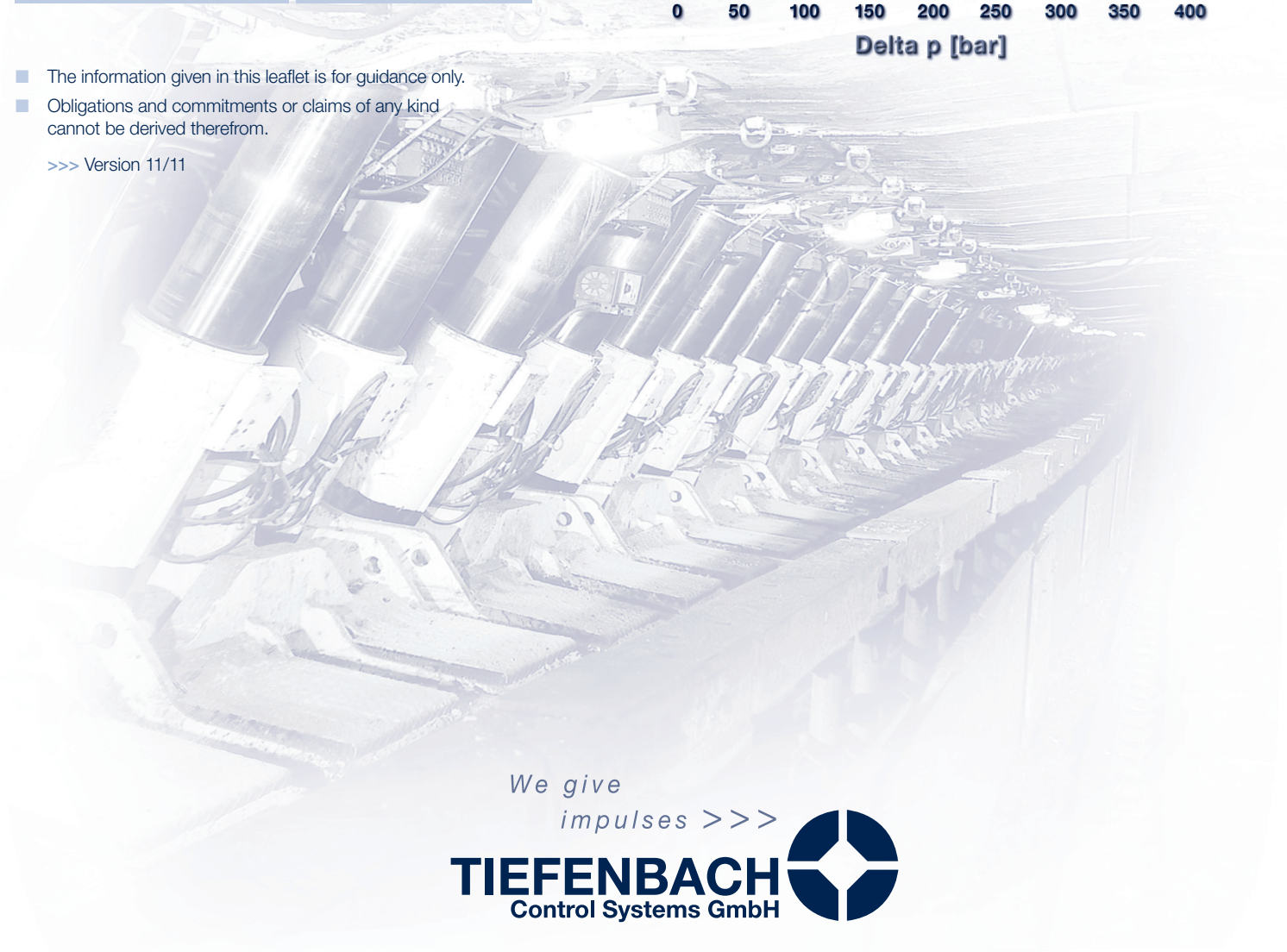

*We give impulses >>>*

TIEFENBACH Control Systems GmbH

**Tiefenbach Control Systems GmbH** · Rombacher Hütte 18a · 44795 Bochum
Telephone +49 (0) 234 - 777 66-0 · Fax +49 (0) 234 - 777 66-999
info@tiefenbach-controlsystems.com · www.tiefenbach-controlsystems.com